OIL FILTER

AFO0SEM136125-CF/F2/C1

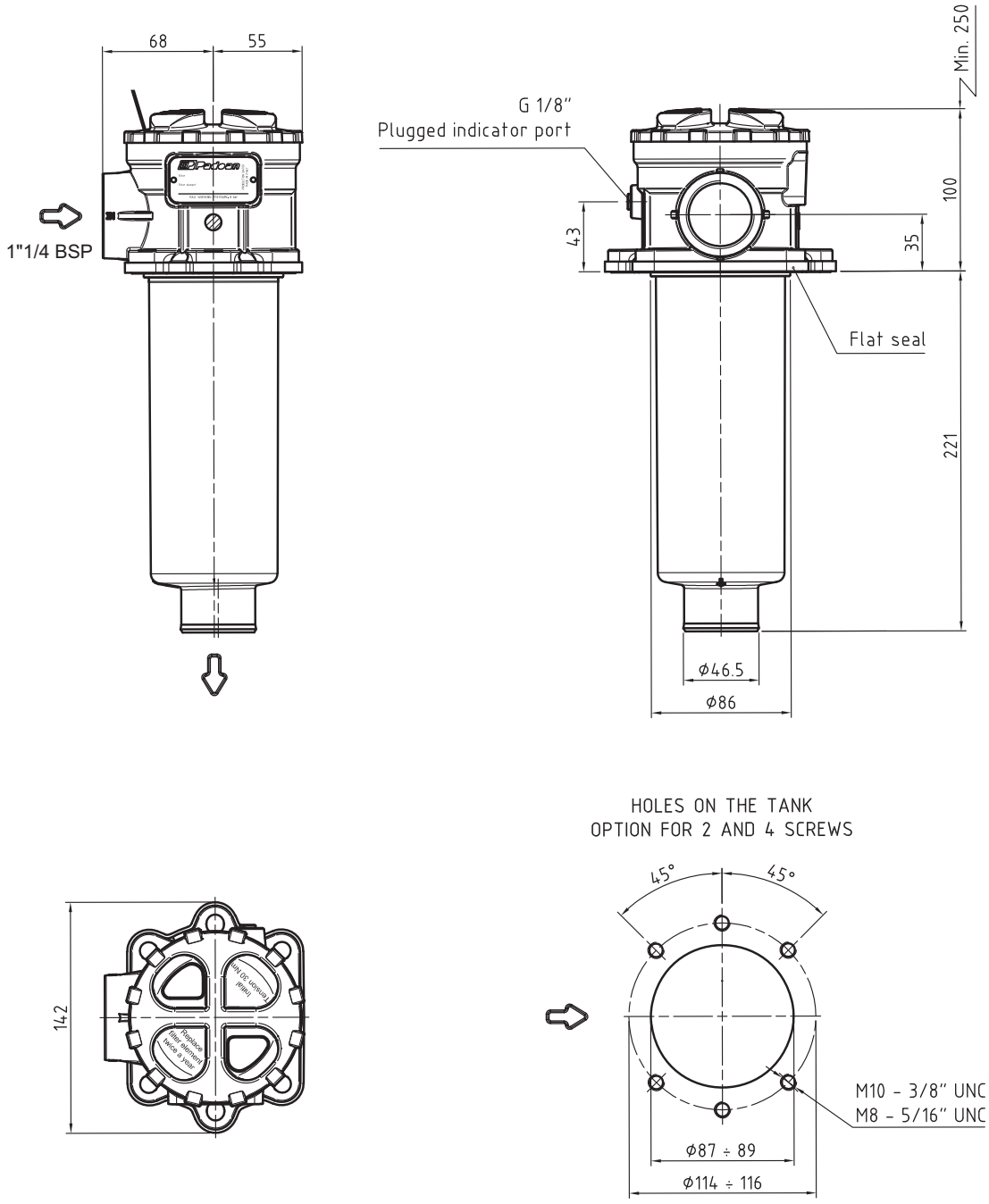

Return filter

Filter housing materials

- Head:
  Aluminium
- Cover:
  Nylon
- Bowl:
  Nylon

Max working pressure

8 bar

Bypass valve

- Opening pressure 175 kPa (1.75 bar)

Seals

- NBR

Temperature

From -25 °C to +110 °C

Note

Filters are provided for vertical mounting

WETANK YOU SINCE 1937

Padoan Srl - Via Risorgive, 20 - 31048 Olmi di S. Biagio di Callalta (TV) - Italy
ph. +39 0422 362172 - fax +39 0422 469770- info@padoan.it - www.padoan.it

The curves are plotted using mineral oil with density of 0.86 kg/dm^3 in compliance with ISO 3968
Δp varies proportionally with density.
The diagram refers to the fiber cartridge

Filter housings Δp pressure drop

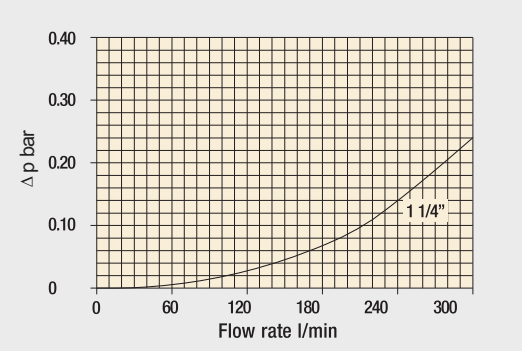

Bypass valve pressure drop

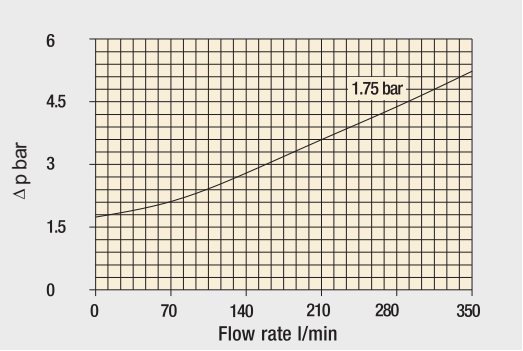

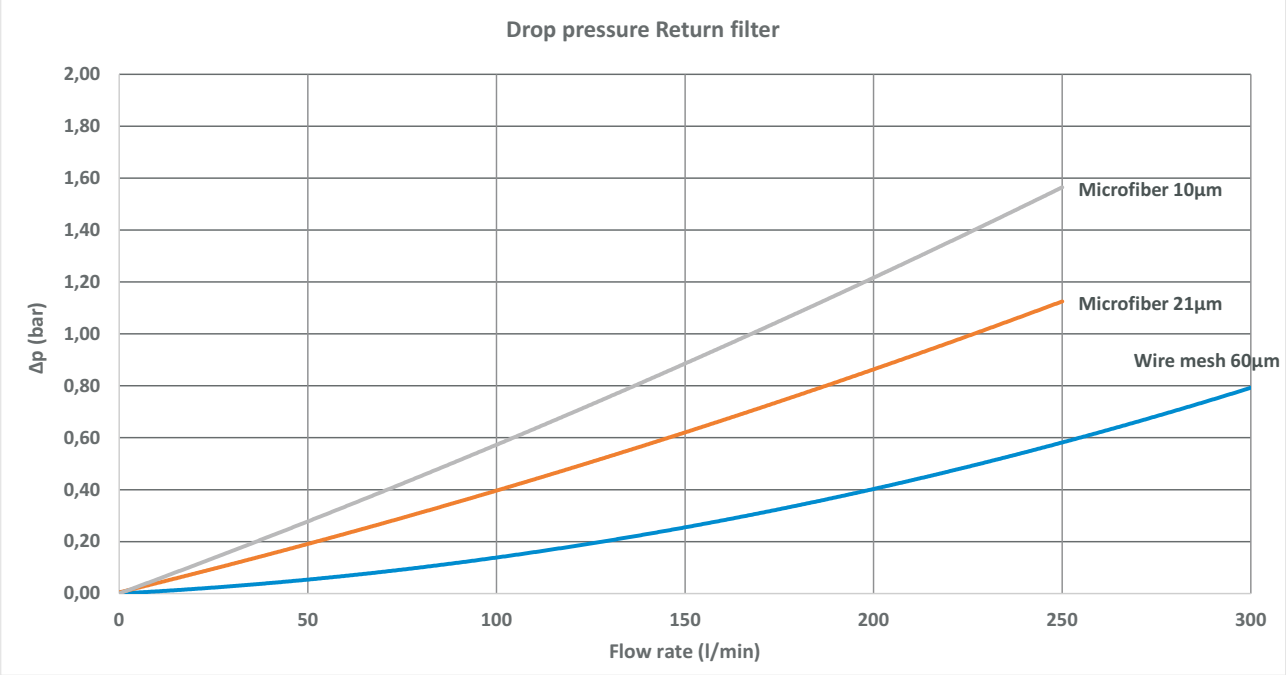

WETANK YOU SINCE 1937
Padoan Srl - Via Risorgive, 20 - 31048 Olmi di S. Biagio di Callalta (TV) - Italy
ph. +39 0422 362172 - fax +39 0422 469770- info@padoan.it - www.padoan.it

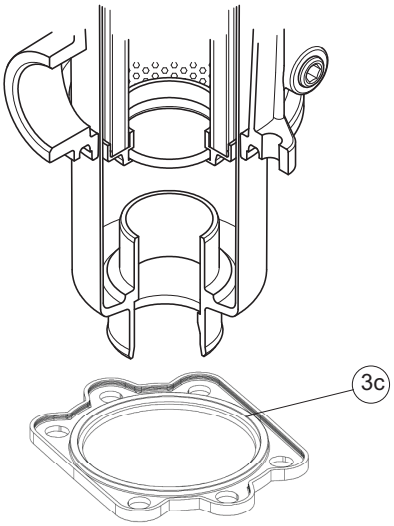

- Usable flow 200l/min with oil density 0.86 kg/dm3
- Collapse pressure for element: 3bar
- Opening pressur bypass valve: 1.75 bar+/-10%

Filter code: AFO0SEM136125CF
Cartridge code: AFO0ELF205070CF

- Filter element microfiber 40 micron
- Produced according to ISO 2942
- Inward fuild filtration
- Working temperature from -25° to +100°C
- Usable flow 250l/min with oil density 0.86 kg/dm3
- Collapse pressure for element: 3bar
- Opening pressur bypass valve: 1.75 bar+/-10%