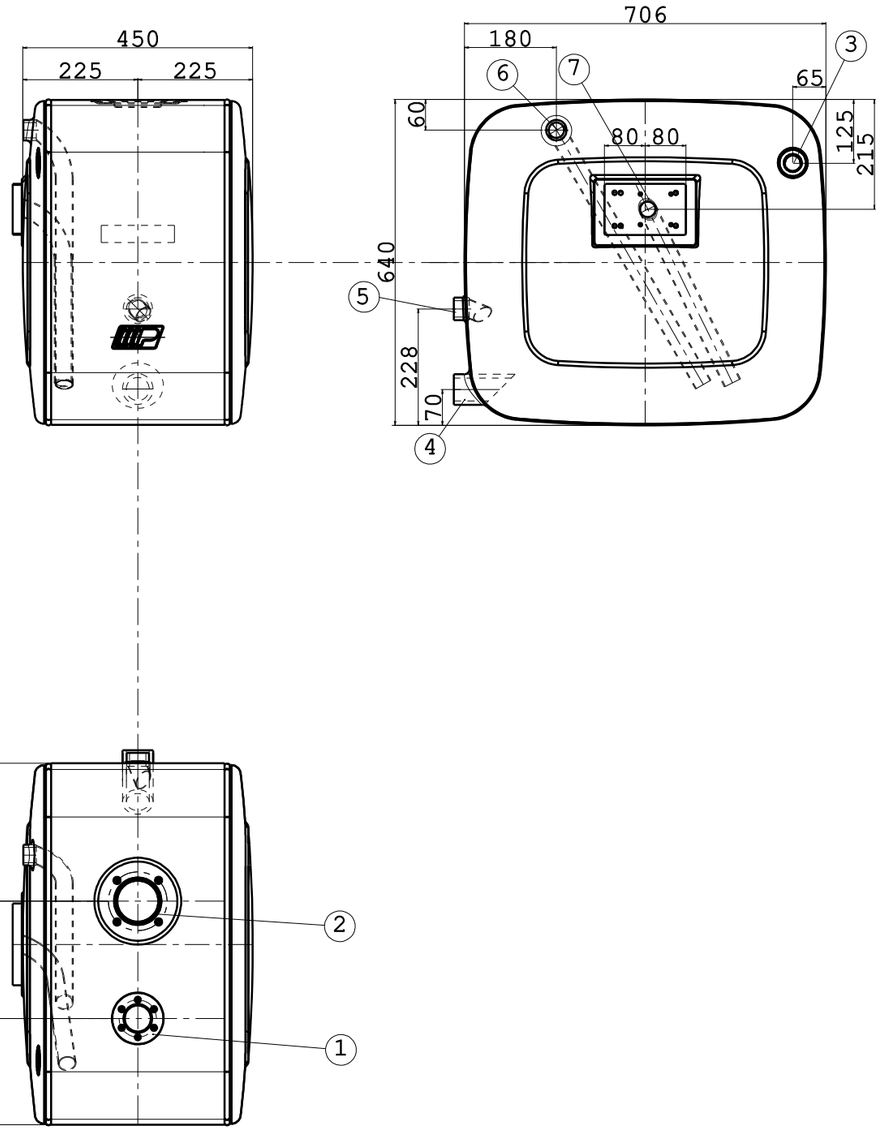

1 OIL CAP FLANGE

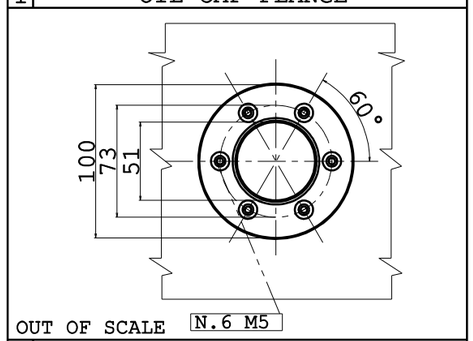

OUT OF SCALE

2 RETURN FILTER FLANGE

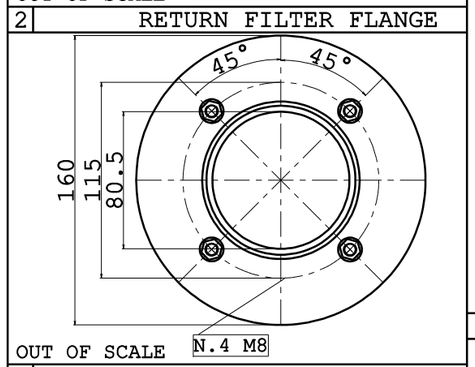

OUT OF SCALE

7 RETURN PLATE

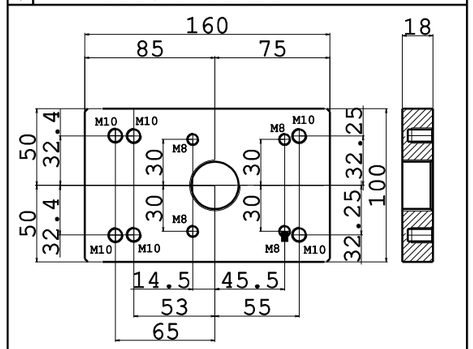

OUT OF SCALE

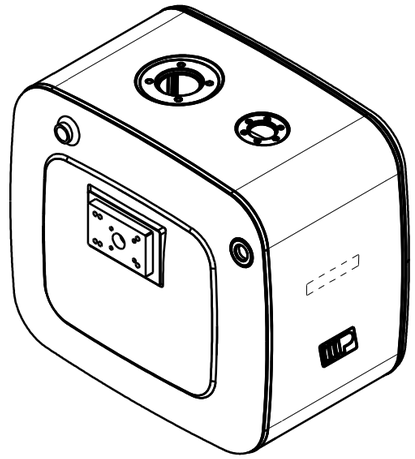

4 OIL SUCTION ADAPTER

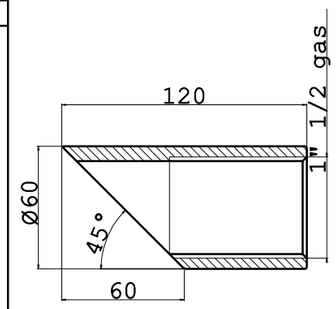

OUT OF SCALE

Plate for
modular 150 with plane seal no O-Ring version
modular 200
modular 250
Hydrocar DM 160-162-180-250

Tank composition

Pos.	Denomination	Q.ty
1	OIL CAP FLANGE	1
2	RETURN FILTER FLANGE	1
3	1" LEVEL INDICATOR	1
4	1" 1/2 SUCTION CONNECTION	1
5	1" REAR RETURN CONNECTION	1
6	1" RETURN CONNECTION	1
7	RETURN VALVE PLATE	1

Rev.	Description	Date	Dis.	Ver.	App.
5	1" REAR RETURN CONNECTION - FILTER FLANGE ROTATED 45°	21/06/2016	FM	MM	EB
4	BACK TO PLATE REV 0	09/07/2015	MM	AF	EB
3	NEW POSITION MODULAR 150 ON VALVE PLATE (WAS 14,5 NOW 8,5) NEW RETURN 1"1/4 ON BACK	22/06/2015	MM	AF	EB
2	NEW VALVE PLATE, LEVEL INDICATOR AT 125 WAS 65	31/03/2015	MM	AF	EB
1	MODIFY PROPOSAL SAMPLE AFTER MEETING WITH CUSTOMERS	13/03/2015	MM	AF	EB
0	EMISSION	01/02/2013	MM	MM	BM

Tank dimensions

Level indicator capacity: 143 Lt

Full capacity: 174 Lt

Support weight: 22 Kg

Tank weight: (F,I,T) kg (A) kg

Dimension: 450x630x706 mm

Part name : Oil tank 170 LT Al/Steel/St.Steel fam. 630x706

Part code : NSO(X)0170045MFPG

Replace the

Replaced by

OUT OF SCALE

Material code

(X)=F:Steel DC03A EN 10130

(X)=I:Stainless steel AISI 304 UNI EN 10088

(X)=T:Textured stainless steel. AISI 304 UNI EN 10088

(X)=A:Aluminium EN AW 5754

General tolerances: ISO 2768 V

Drawing format A3

Padoan®

OWNERSHIP OF THIS DRAWING IS RESERVED BY LAW AND MAY NOT REPRODUCED IN WHOLE OR IN PART WITHOUT PERMISSION OF PADOAN S.R.L.

DO NOT MAKE MEASUREMENTS ON DRAWING
DO NOT CHANGE WITHOUT TECHNICAL OFFICE AUTHORIZATION