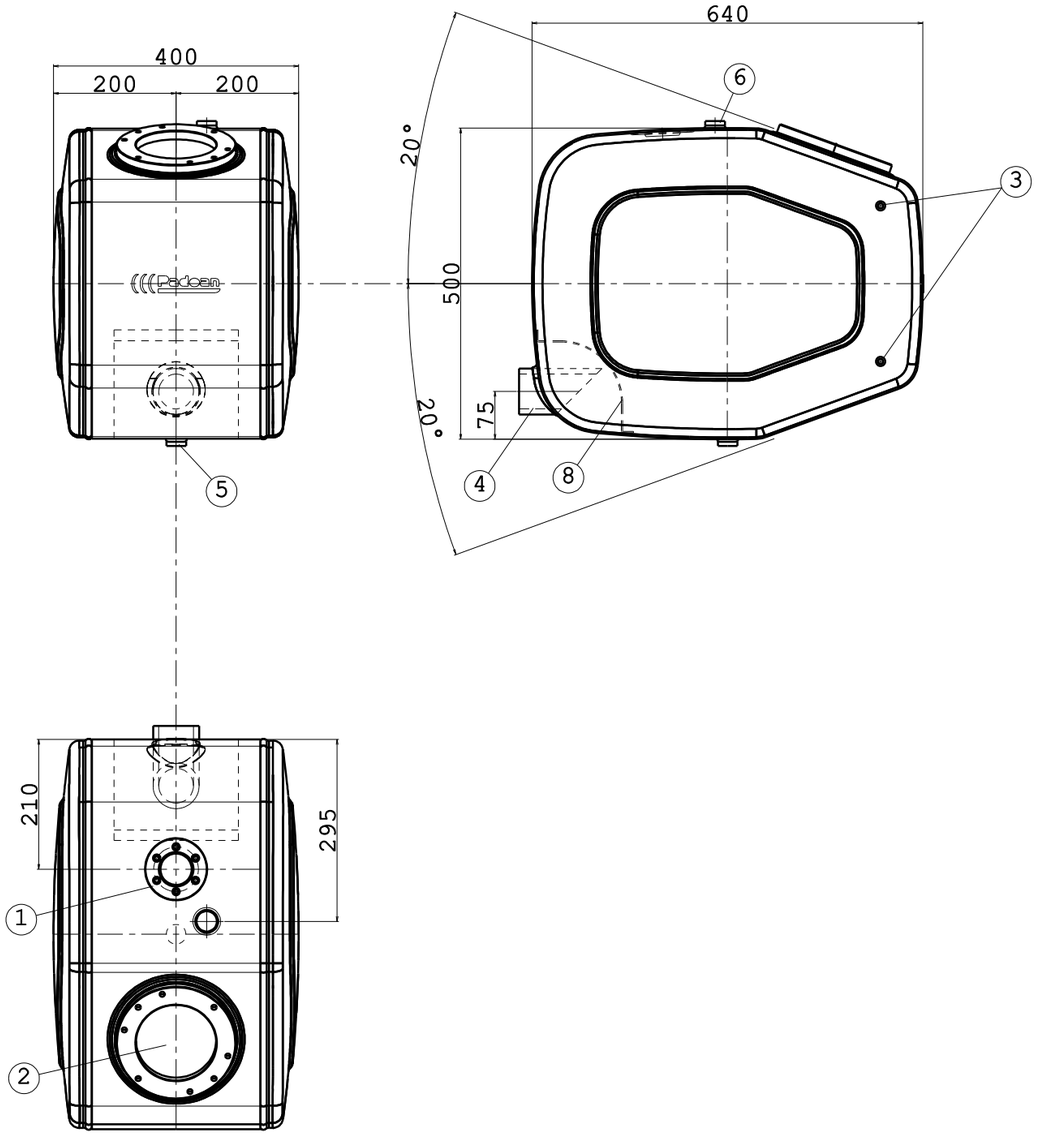


## 1 OIL CAP FLANGE

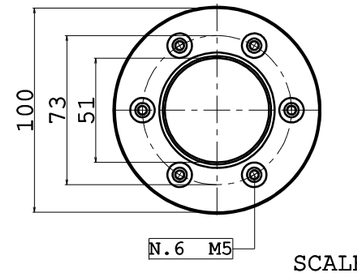


SCALE 1:3

## 2 RETURN FILTER FLANGE

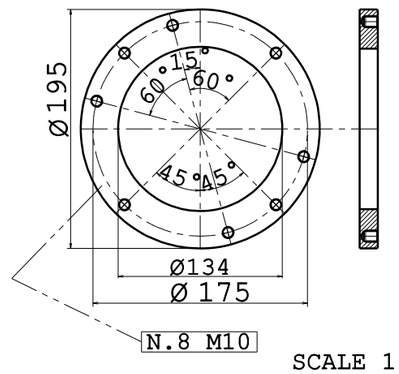


SCALE 1:3

### Tank composition

| Pos. | Denomination | Q.ty |
|---|---|---|
| 1 | OIL CAP FLANGE | 1 |
| 2 | RETURN FILTER FLANGE | 1 |
| 3 | LEVEL INDICATOR 254 mm PREDISPOSITION | 1 |
| 4 | OIL SUCTION CONNECTION 2" | 1 |
| 5 | DRAINAGE 3/4" | 1 |
| 6 | OIL RETURN CONNECTION 3/4" | 1 |
| 7 | REFLUX PROTECTION WALL | 1 |
| | | |
| | | |
| | | |

| Rev. | Modify description | Date | Des. | Ver. | App. |
|---|---|---|---|---|---|
| 0 | EMISSION | 29/07/2014 | MM | MM | BM |

Tank dimension

Part name : Oil tank 100 LT Al/Steel/St.Steel fam. 500x640 T20

Full capacity: 103 Lt

Part code : NSO(X)0100040T200

Replace the

Replaced by

Support weight: 20 Kg

Scale: 1:10

Tank weight (F,I,T) kg (A) kg

Dimensions: 400x500x640 mm

Material code
(X)=F:Steel DC 01 EK EN 10209
(X)=I:Stainless steel AISI 304
(X)=T:Text stain.steel AISI 304
(X)=A:Aluminium EN AW 5754

General tolerances: ISO 2768 V

Drawing format A3

Padoan® TANKS FOR INDUSTRIAL VEHICLES

OWNERSHIP OF THIS DRAWING IS RESERVED BY LAW AND MAY NOT REPRODUCED IN WHOLE OR IN PART WITHOUT PERMISSION OF PADOAN S.R.L.

DO NOT MAKE MEASUREMENTS ON DRAWING
DO NOT CHANGE WITHOUT TECHNICAL OFFICE AUTHORIZATION