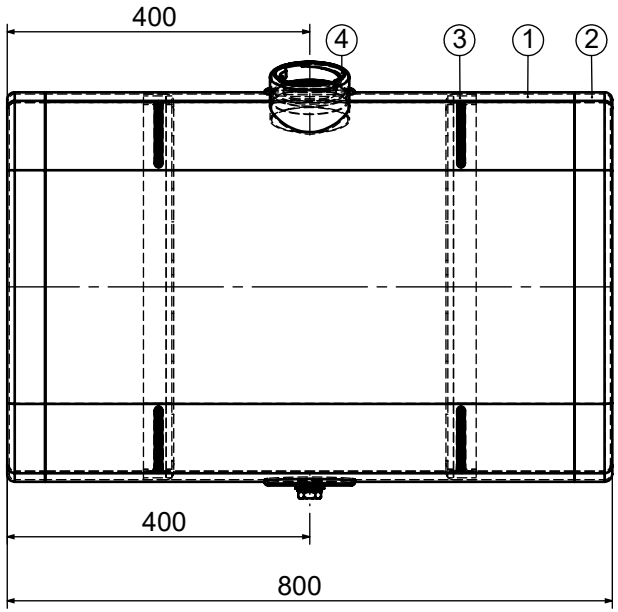

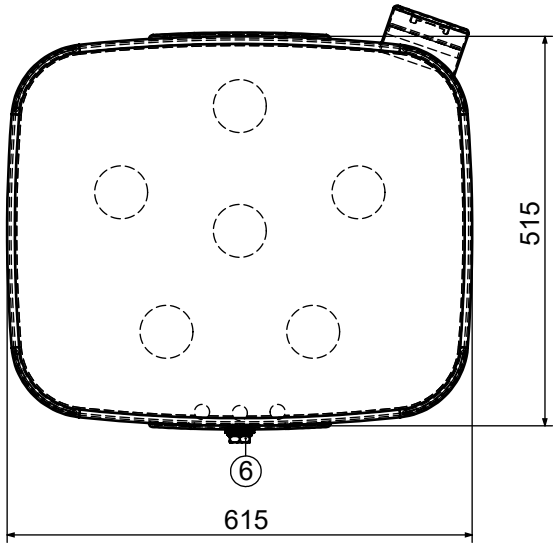

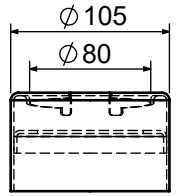

4-Fıllıng Neck(Ø80mm)

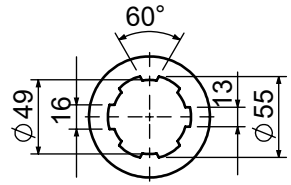

5-Level sensor

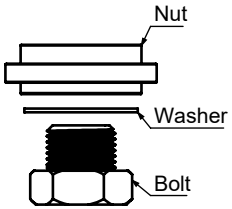

6-M18X1,5

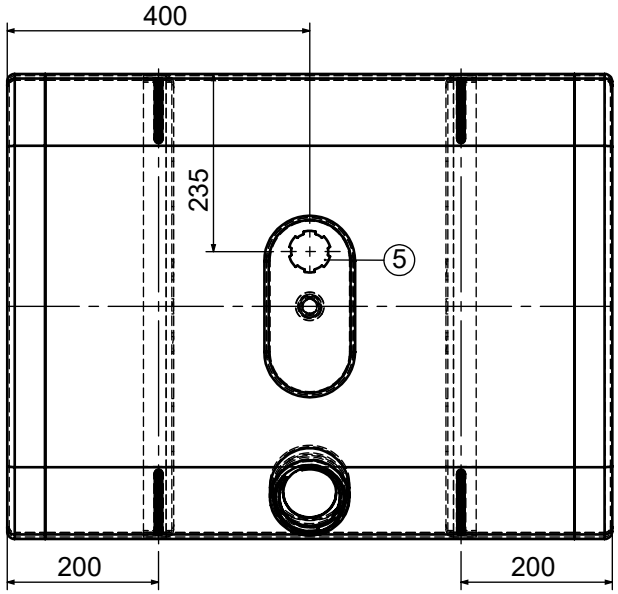

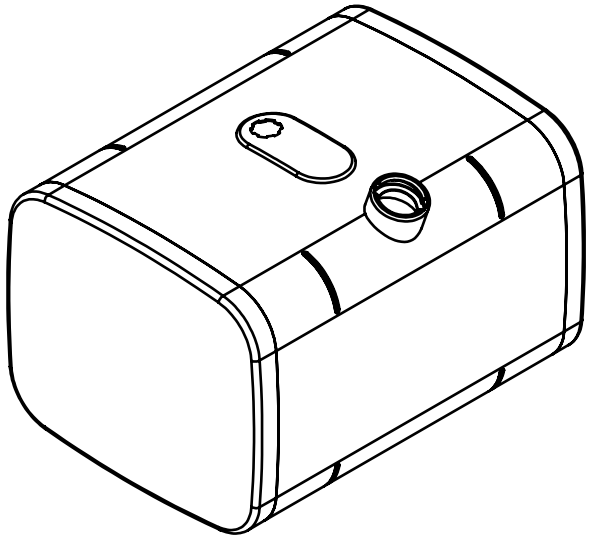

Item	Qty	Part Name	Material
1	1	Body	Al.5754-2,5mm
2	2	Side Plate	Al.5754-2,5mm
3	2	Baffle Plate	Al.5754-2,5mm
4	1	Filling Neck	Al.5754-2,5mm
5	1	Level Sensor	
6	1	Suctıon Adater-M22X1,5	Al. 6082

	Drawing-A4	Signature	Product Name	Man Fuel Tank	Liter	Material	Weight	
Drafter	Murat Oktay		Dimensions	515X615X800MM	200 L	Al.5754	Date	03.07.2026
Approval			Product Code				Tolerance	
Scale		ECE R34	Explanation				Page	1