In line double-acting flow control valves

FT 257/2

Double-acting flow control valves available from 1/8" to 2" BSPP size, max. working pressure 400 Bar / 320 Bar, adjustable oil flow rate from 0,5 to 200 Lt./min.(depending on the size)

Double-acting control
In line or panel mounting
Carbon steel
Connections: F - F Female - Female

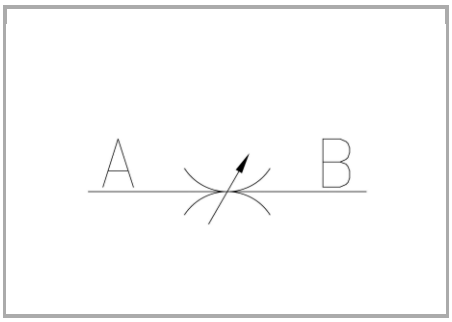

Technical information

Technical description

The valves FT 257/2 allow flow control in both directions. They are equipped with a needle so to obtain: • efficient metallic seal; • flow linearity at the opening; • accurate regulation for a wide range of flow rate. The typical painted and FT (standard) serigraphed aluminium handwheel is equipped with a scale that, together with a keyed metal ring with graduated fractional scale, made up a double reference system to easily identify flow condition. A locking screw in the handwheel ensures stable flow values preventing accidental adjustments or movements due to vibrations and unwanted impacts. A ring nut (G) is used to carry out the panel mounting, on request.

Materials

CORPO VALVOLA / VALVE BODY	Acciaio/Steel 11 S Mn Pb 37-UNI EN 10087
SPILLO DI REGOLAZIONE / ADJUSTING NEEDLE	Acciaio legato/Alloy steel
GUARNIZIONI / GASKETS	Di serie NBR - A richiesta FPM/Standard NBR-on demand FPM
ANELLI ANTIESTRUSIONE / ANTIEXTRUSION RINGS	PTFE
MANOPOLA TIPO MA - RA / KNOB TYPE MA - RA	Alluminio / Aluminium GD AlSi12 - UNI EN AB 46100
MANOPOLA TIPO MP / KNOB TYPE MP	ABS

Technical data

TIPO / TYPE	PRESSIONE ESERCIZIO BAR / WORKING PRESSURE BAR	MIN. PRESSIONE SCOPPIO BAR / MIN. BURSTING PRESSURE BAR	TEMPERATURA ESERCIZIO / WORKING TEMPERATURE	GRADO DI FILTRAZIONE µm / FILTRATION GRADE µm
18	400	1600	-20°C/+100°C	25
14	400	1600	-20°C/+100°C	25
38	400	1600	-20°C/+100°C	25
12	400	1600	-20°C/+100°C	25
34	400	1600	-20°C/+100°C	25
100	320	1300	-20°C/+100°C	25
114	320	1300	-20°C/+100°C	25
112	320	1300	-20°C/+100°C	25
200	320	1300	-20°C/+100°C	25

Dimensional tables and drawings

TIPO / TYPE	A UNI 338	B	C	D	E	ØF
18	1/8" G	8,5	38	59	64	22
14	1/4" G	12,5	49	71	78	27
38	3/8" G	12,5	59	84	93	33
12	1/2" G	15,5	68	97	107	38
34	3/4" G	17	86	120,5	132,5	47
100	1" G	20	105	151,5	167,5	58
114	1 1/4" G	22	120	156,5	172,5	58
112	1 1/2" G	24	134	167	181	58
200	2" G	27	150	188	202	108

TIPO / TYPE	ØF1	G	H	CH	PESO / WEIGHT KG
18	40	13,5	M17x1	16	0,110
14	50	17	M20x1	20	0,200
38	70	19,5	M25x1,5	25	0,375
12	80	21	M30x1,5	30	0,600
34	100	26,5	M40x1,5	40	1,300
100	120	35	M50x1,5	50	2,550
114	120	35	M50x1,5	55	2,994
112	120	35	M55x2	65	4,217
200	/	44	M65x2	75	7,320

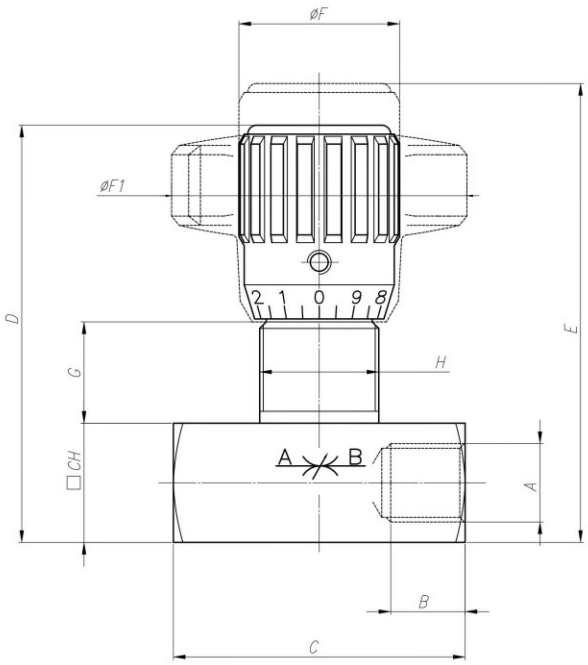

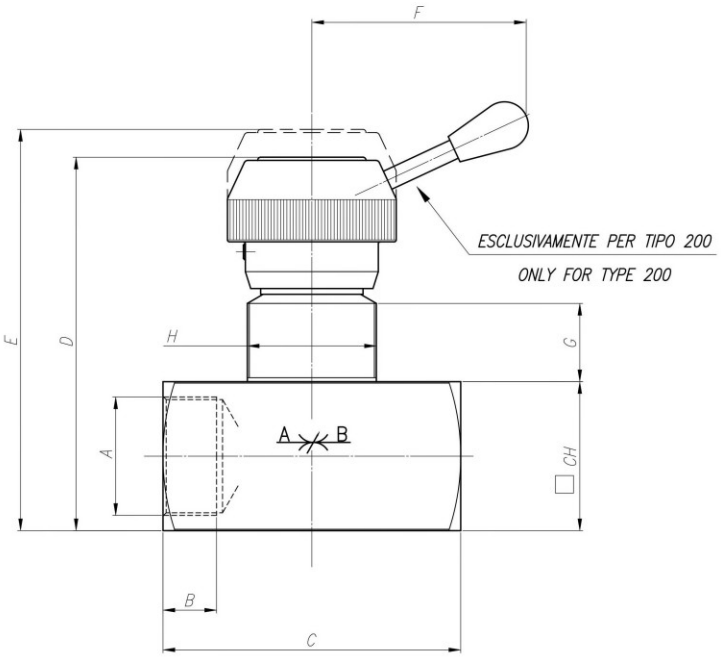

Flow rate curves

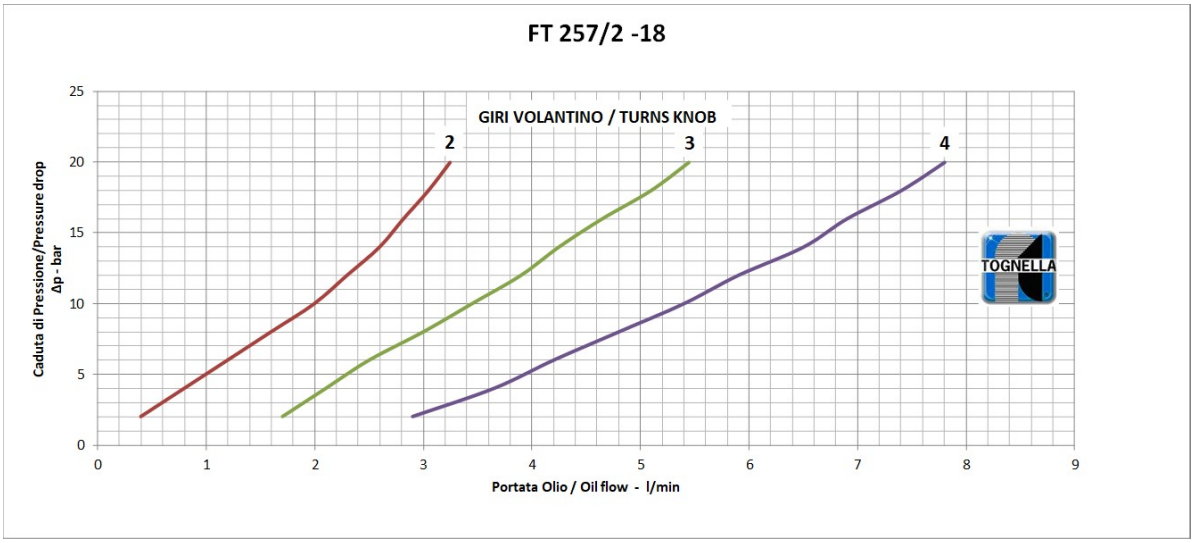

FT 257/2 - 14

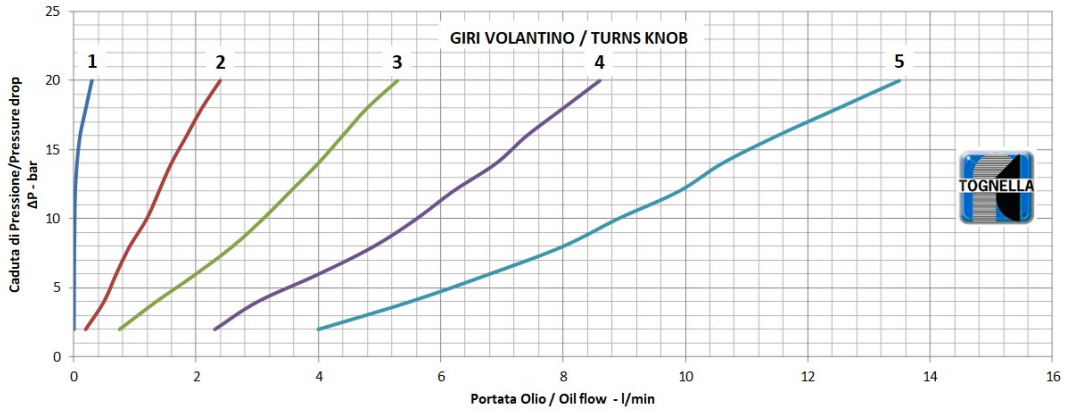

FT 257/2 -38

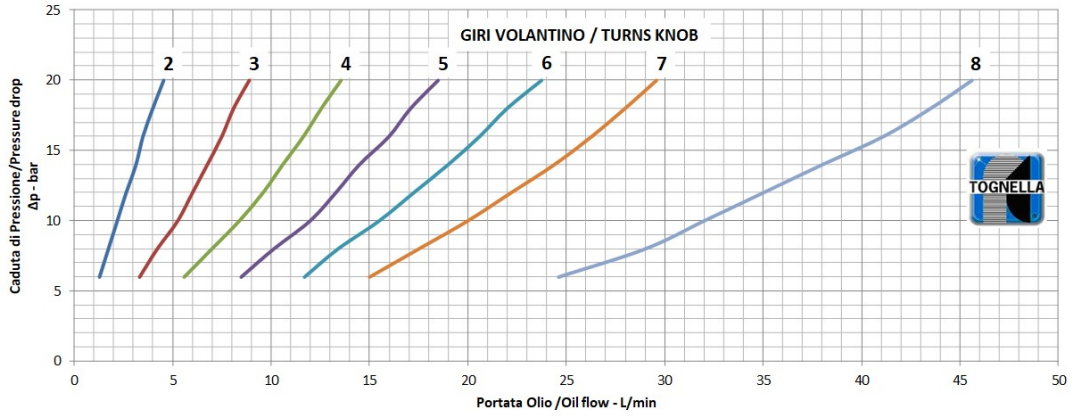

FT 257/2 -12

FT 257/2 -34

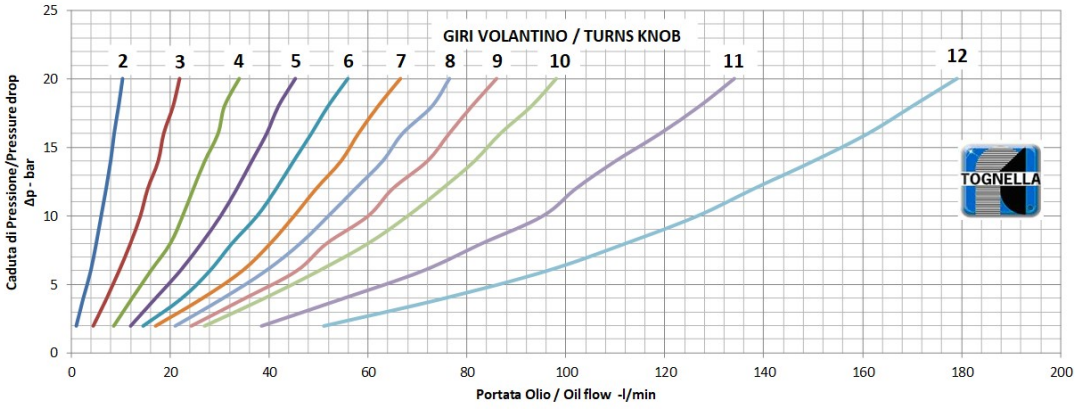

FT 257/2 -100

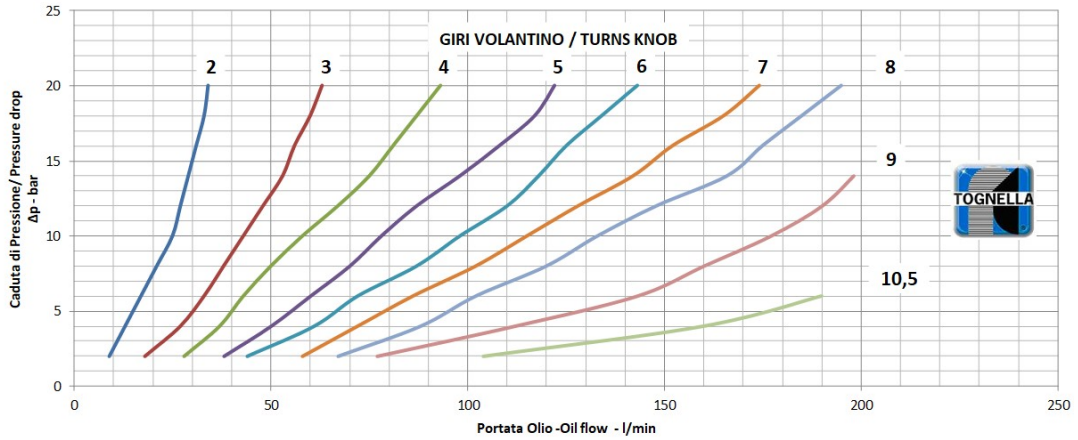

FT 257/2 - 114

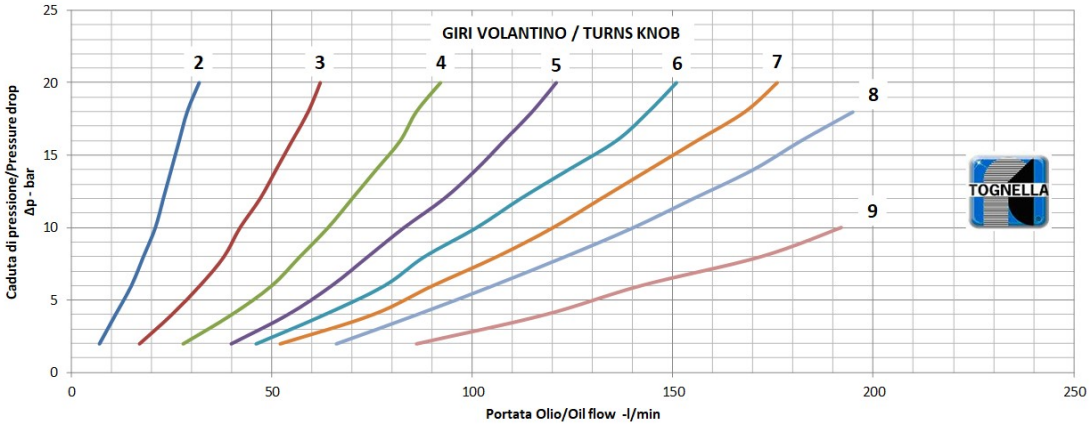

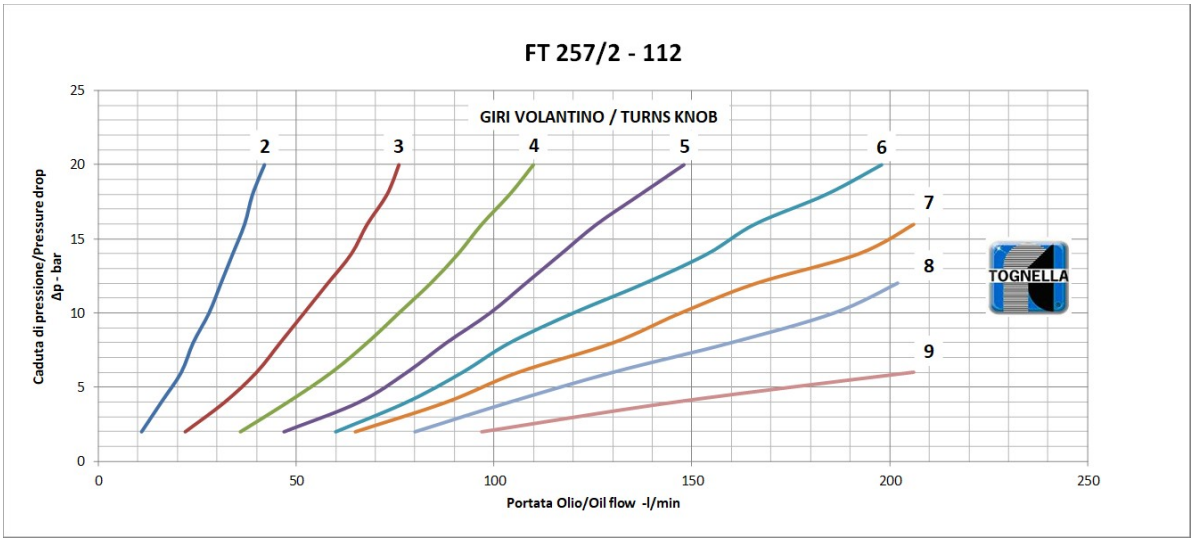
FT 257/2 - 112
GIRI VOLANTINO / TURNS KNOB
2
3
4
5
6
7
8
9
Caduta di pressione/Pressure drop
Δp - bar
Portata Olio/Oil flow -l/min
0
5
10
15
20
25
0
50
100
150
200
250
TOGNELLA

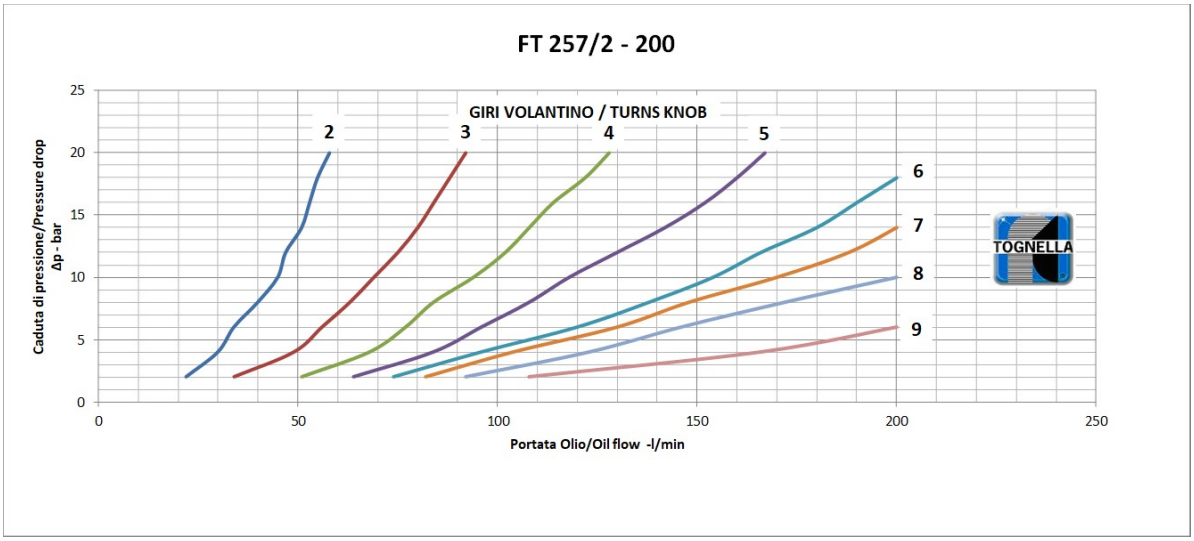
FT 257/2 - 200
GIRI VOLANTINO / TURNS KNOB
2
3
4
5
6
7
8
9
Caduta di pressione/Pressure drop
Δp - bar
Portata Olio/Oil flow -l/min
0
5
10
15
20
25
0
50
100
150
200
250
TOGNELLA