UFM 051

Mobile filtration unit 50 l/min flow rate

INSTALLATION, SERVICE AND MAINTENANCE MANUAL AND SAFETY INSTRUCTIONS

Please scan or click the QR codes
to get updated electronic version
of the related document.

Scan or click me!

Contamination management

INDEX

		Page
1	HYDRAULIC FLUIDS	12
2	FLUIDS CONTAMINATION	12
3	FLUIDS COMPATIBILITY CHART	12
4	EFFECTS OF CONTAMINATION ON HYDRAULIC COMPONENTS	13
5	MEASURING THE SOLID CONTAMINATION LEVEL	13
6	FILTRATION TECHNOLOGIES	16
7	APPLICABLE STANDARDS FOR FILTER DEVELOPMENT	17

1 HYDRAULIC FLUIDS

The fluid is the vector that transmits power, energy within an oleodynamic circuit. In addition to transmitting energy through the circuit, it also performs additional functions such as lubrication, protection and cooling of the surfaces.
The classification of fluids used in hydraulic systems is coded in many regulatory references, different Standards.

The most important classification system for hydraulic fluids is the one defined by International Organization for Standardization (ISO), which established a classification system within their standard: "ISO 6743-4 Lubricants, Industrial Oils and Related Products" . In particular, the parts of interest for hydraulic fluids are:
- Lubricants, industrial oils and related products (class L)
- Classifications - Part 4L - Family H (Hydraulic systems)

The ISO 6743-4 classification system can be generally applied to the three primary classes of hydraulic fluids:

- Mineral Oils (i.e.: petroleum) Hydraulic Fluids (i.e.: HH: Mineral lubricants without corrosion inhibitors; HL: HH-type lubricants with oxidation reduction and anticorrosive additives; HM: HL-type lubricants with anti-wear additives; HV: HM-type lubricants with a higher viscosity grade and temperature properties; and others).

- Biodegradable Hydraulic Fluids (HExx), also defined as "Environmentally acceptable hydraulic fluids".

- Fire Resistant Hydraulic Fluids (HFxx), which could be further split into: Fire-resistant aqueous fluids (HFAx, HFB; HFC) ; Fire-resistant synthetic anhydrous fluids (HFDx).

The choice of fluid for an hydraulic system must take into account several parameters.
These parameters can adversely affect the performance of an hydraulic system, causing delay in the controls, pump cavitation, excessive absorption, excessive temperature rise, efficiency reduction, increased drainage, wear, jam/block or air intake in the plant.

The main properties that characterize hydraulic fluids and affect their choice are:
- DYNAMIC VISCOSITY
  It identifies the fluid's resistance to sliding due to the impact of the particles forming it.

- KINEMATIC VISCOSITY
  It is a widespread formal dimension in the hydraulic field.
  It is calculated with the ratio between the dynamic viscosity and the fluid density.
  Kinematic viscosity varies with temperature and pressure variations.

- VISCOSITY INDEX
  This value expresses the ability of a fluid to maintain viscosity when the temperature changes.
  A high viscosity index indicates the fluid's ability to limit viscosity variations by varying the temperature.

- FILTERABILITY INDEX
  It is the value that indicates the ability of a fluid to cross the filter materials.
  A low filterability index could cause premature clogging of the filter material.

- WORKING TEMPERATURE
  Working temperature affects the fundamental characteristics of the fluid.
  As already seen, some fluid characteristics, such as cinematic viscosity, vary with the temperature variation.
  When choosing a hydraulic oil, must therefore be taken into account of the environmental conditions in which the machine will operate.

- COMPRESSIBILITY MODULE
  Every fluid subjected to a pressure contracts, increasing its density.
  The compressibility module identifies the increase in pressure required to cause a corresponding increase in density.

- HYDROLYTIC STABILITY
  It is the characteristic that prevents galvanic pairs that can cause wear in the plant/system.

- ANTIOXIDANT STABILITY AND WEAR PROTECTION
  These features translate into the capacity of a hydraulic oil to avoid corrosion of metal elements inside the system.

- HEAT TRANSFER CAPACITY
  It is the characteristic that indicates the capacity of hydraulic oil to exchange heat with the surfaces and then cool them.

2 FLUID CONTAMINATION

Whatever the nature and properties of fluids, they are inevitably subject to contamination. Fluid contamination can have two origins:

- INITIAL CONTAMINATION
  Caused by the introduction of contaminated fluid into the circuit, or by incorrect storage, transport or transfer operations.

- PROGRESSIVE CONTAMINATION
  Caused by factors related to the operation of the system, such as metal surface wear, sealing wear, oxidation or degradation of the fluid, the introduction of contaminants during maintenance, corrosion due to chemical or electrochemical action between fluid and components, cavitation.
  The contamination of hydraulic systems can be of different nature:

- SOLID CONTAMINATION
  For example rust, slag, metal particles, fibers, rubber particles, paint particles or additives

- LIQUID CONTAMINATION
  For example, the presence of water due to condensation or external infiltration or acids

- GASEOUS CONTAMINATION
  For example, the presence of air due to inadequate oil level in the tank, drainage in suction ducts, incorrect sizing of tubes or tanks.

3 FLUID COMPATIBILITY CHARTS

For more detailed information on specific fluid compatibility please refer to the fluid compatibility charts on our website:

Scan or click me!

4 EFFECTS OF CONTAMINATION ON HYDRAULIC COMPONENTS

Solid contamination is recognized as the main cause of malfunction, failure and early degradation in hydraulic systems. It is impossible to delete it completely, but it can be effectively controlled by appropriate devices.

CONTAMINATION IN PRESENCE OF LARGE TOLERANCES

CONTAMINATION IN PRESENCE OF NARROW TOLERANCES

Solid contamination mainly causes surface damage and component wear.

- ABRASION OF SURFACES
  Cause of leakage through mechanical seals, reduction of system performance, failures.

- SURFACE EROSION
  Cause of leakage through mechanical seals, reduction of system performance, variation in adjustment of control components, failures.

- ADHESION OF MOVING PARTS
  Cause of failure due to lack of lubrication.

- DAMAGES DUE TO FATIGUE
  Cause of breakdowns and components breakdown.

ABRASION

EROSION

ADHESION

FATIGUE

Liquid contamination mainly results in decay of lubrication performance and protection of fluid surfaces.

DISSOLVED WATER

- INCREASING FLUID ACIDITY
  Cause of surface corrosion and premature fluid oxidation
- GALVANIC COUPLE AT HIGH TEMPERATURES
  Cause of corrosion

FREE WATER - ADDITIONAL EFFECTS

- DECAY OF LUBRICANT PERFORMANCE
  Cause of rust and sludge formation, metal corrosion and increased solid contamination
- BATTERY COLONY CREATION
  Cause of worsening in the filterability feature
- ICE CREATION AT LOW TEMPERATURES
  Cause damage to the surface
- ADDITIVE DEPLETION
  Free water retains polar additives

Gaseous contamination mainly results in decay of system performance.

- CUSHION SUSPENSION
  Cause of increased noise and cavitation.
- FLUID OXIDATION
  Cause of corrosion acceleration of metal parts.
- MODIFICATION OF FLUID PROPERTIES
  (COMPRESSIBILITY MODULE, DENSITY, VISCOSITY)
  Cause of system's reduction of efficiency and of control.
  It is easy to understand how a system without proper contamination management is subject to higher costs than a system that is provided.
- MAINTENANCE
  Increase maintenance activities, spare parts, machine stop costs.
- ENERGY AND EFFICIENCY
  Efficiency and performance reduction due to friction, drainage, cavitation.

5 MEASURING THE SOLID CONTAMINATION LEVEL

The level of contamination of a system identifies the amount of contaminant contained in a fluid. This parameter refers to a unit volume of fluid.
The level of contamination may be different at different points in the system. From the information in the previous paragraphs it is also apparent that the level of contamination is heavily influenced by the working conditions of the system, by its working years and by the environmental conditions.

What is the size of the contaminating particles that we must handle in our hydraulic circuit?

HUMAN HAIR
(75 µm)

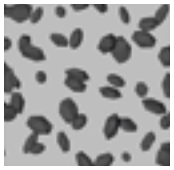

MINIMUM DIMENSION VISIBLE WITH HUMAN EYES
(40 µm)

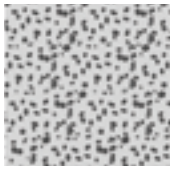

TYPICAL CONTAMINANT DIMENSION IN A HYDRAULIC CIRCUIT
(4 - 14 µm)

Contamination level analysis is significant only if performed with a uniform and repeatable method, conducted with standard test methods and suitably calibrated equipment. To this end, ISO has issued a set of standards that allow tests to be conducted and express the measured values in the following ways.

- GRAVIMETRIC LEVEL - ISO 4405

The level of contamination is defined by checking the weight of particles collected by a laboratory membrane. The membrane must be cleaned, dried and desiccated, with fluid and conditions defined by the Standard.
The volume of fluid is filtered through the membrane by using a suitable suction system. The weight of the contaminant is determined by checking the weight of the membrane before and after the fluid filtration.

CLEAN MEMBRANE

CONTAMINATED MEMBRANE

- CUMULATIVE DISTRIBUTION OF THE PARTICLES SIZE - ISO 4406

The level of contamination is defined by counting the number of particles of certain dimensions per unit of volume of fluid. Measurement is performed by Contamination Monitoring Products (CMP).
Following the count, the contamination classes are determined, corresponding to the number of particles detected in the unit of fluid.
The most common classification methods follow ISO 4406 and SAE AS 4059 (Aerospace Sector) regulations.
NAS 1638 is still used although obsolete.

Classification example according to ISO 4406

The International Standards Organization standard ISO 4406 is the preferred method of quoting the number of solid contaminant particles in a sample. The level of contamination is defined by counting the number of particles of certain dimensions per unit of volume of fluid. The measurement is performed by Contamination Monitoring Products (CMP).

The numbers represent a code which identifies the number of particles of certain sizes in 1ml of fluid. Each code number has a particular size range.
The first scale number represents the number of particles equal to or larger than 4 $\mu m_{(c)}$ per millilitre of fluid;
The second scale number represents the number of particles equal to or larger than 6 $\mu m_{(c)}$ per millilitre of fluid;
The third scale number represents the number of particles equal to or larger than 14 $\mu m_{(c)}$ per millilitre of fluid.

ISO 4406 - Allocation of Scale Numbers

Class	Number of particles per ml	
	Over	Up to
28	1 300 000	2 500 000
27	640 000	1 300 000
26	320 000	640 000
25	160 000	320 000
24	80 000	160 000
23	40 000	80 000
22	20 000	40 000
21	10 000	20 000
20	5 000	10 000
19	2 500	5 000
18	1 300	2 500
17	640	1 300
16	320	640
15	160	320
14	80	160
13	40	80
12	20	40
11	10	20
10	5	10
9	2.5	5
8	1.3	2.5
7	0.64	1.3
6	0.32	0.64
5	0.16	0.32
4	0.08	0.16
3	0.04	0.08
2	0.02	0.04
1	0.01	0.02
0	0	0.01

> 4 $\mu m_{(c)}$ = 350 particles
> 6 $\mu m_{(c)}$ = 100 particles
> 14 $\mu m_{(c)}$ = 25 particles
16 / 14 / 12

ISO 4406 Cleanliness Code System

Microscope counting examines the particles differently to Contamination Monitoring Products (CMP) and the code is given with two scale numbers only. These are at 5 µm and 15 µm equivalent to the 6 $\mu m_{(c)}$ and 14 $\mu m_{(c)}$ of Contamination Monitoring Products (CMP).

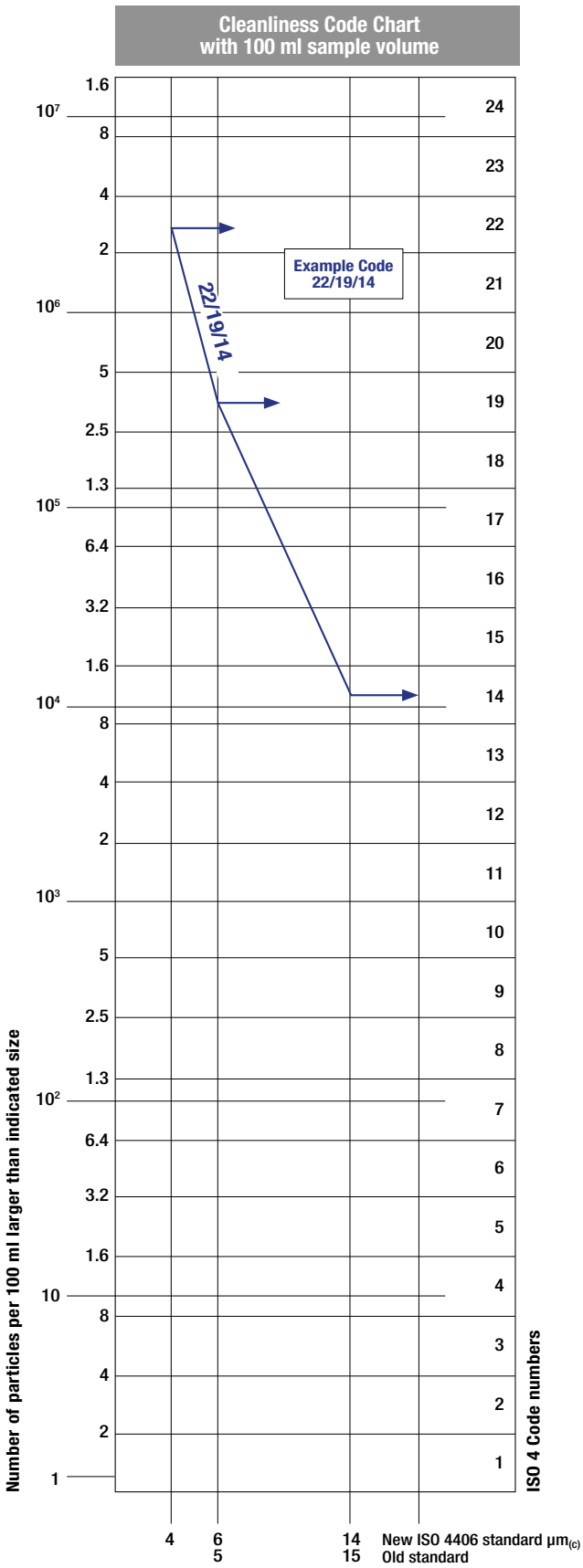

- CUMULATIVE DISTRIBUTION OF THE PARTICLES SIZE
  SAE AS4059-1 and SAE AS4059-2

Classification example according to SAE AS4059 - Rev. G

The code, prepared for the aerospace industry, is based on the size, quantity, and particle spacing in a 100 ml fluid sample. The contamination classes are defined by numeric codes, the size of the contaminant is identified by letters (A-F).

This SAE Aerospace Standard (AS) defines cleanliness levels for particulate contamination of hydraulic fluids and includes methods of reporting data relating to the contamination levels. Tables 1 and 2 below provide differential and cumulative particle counts respectively for counts obtained by an automatic particle counter, e.g. LPA3.

Table 1 - Class for differential measurement

Class	Dimension of contaminant Maximum Contamination Limits per 100 ml					
	5-15 µm	15-25 µm	25-50 µm	50-100 µm	>100 µm	(1)
	6-14 $\mu m_{(c)}$	14-21 $\mu m_{(c)}$	21-38 $\mu m_{(c)}$	38-70 $\mu m_{(c)}$	>70 $\mu m_{(c)}$	(2)
00	125	22	4	1	0	
0	250	44	8	2	0	
1	500	89	16	3	1	
2	1 000	178	32	6	1	
3	2 000	356	63	11	2	
4	4 000	712	126	22	4	
5	8 000	1 425	253	45	8	
6	16 000	2 850	506	90	16	
7	32 000	5 700	1 012	180	32	
8	64 000	11 400	2 025	360	64	
9	128 000	22 800	4 050	720	128	
10	256 000	45 600	8 100	1 440	256	
11	512 000	91 200	16 200	2 880	512	
12	1 024 000	182 400	32 400	5 760	1 024	

6 - 14 $\mu m_{(c)}$ = 15 000 particles
14 - 21 $\mu m_{(c)}$ = 2 200 particles
21 - 38 $\mu m_{(c)}$ = 200 particles
38 - 70 $\mu m_{(c)}$ = 35 particles
> 70 $\mu m_{(c)}$ = 3 particles
SAE AS4059 REV G - Class 6

(1) Size range, optical microscope, based on longest dimension as measured per AS598 or ISO 4407. **(2)** Size range CMP calibrated per ISO 11171 or an optical or electron microscope with image analysis software, based on projected area equivalent diameter. **(3)** Contamination classes and particle count limits are identical to NAS 1638.

Table 2 - Class for cumulative measurement

Class	Dimension of contaminant Maximum Contamination Limits per 100 ml						
	>1 µm	>5 µm	>15 µm	>25 µm	>50 µm	>100 µm	(1)
	>4 $\mu m_{(c)}$	>6 $\mu m_{(c)}$	>14 $\mu m_{(c)}$	>21 $\mu m_{(c)}$	>38 $\mu m_{(c)}$	>70 $\mu m_{(c)}$	(2)
000	195	76	14	3	1	0	
00	390	152	27	5	1	0	
0	780	304	54	10	2	0	
1	1 560	609	109	20	4	1	
2	3 120	1 217	217	39	7	1	
3	6 250	2 432	432	76	13	2	
4	12 500	4 864	864	152	26	4	
5	25 000	9 731	1 731	306	53	8	
6	50 000	19 462	3 462	612	106	16	
7	100 000	38 924	6 924	1 224	212	32	
8	200 000	77 849	13 849	2 449	424	64	
9	400 000	155 698	27 698	4 898	848	128	
10	800 000	311 396	55 396	9 796	1 696	256	
11	1 600 000	622 792	110 792	19 592	3 392	512	
12	3 200 000	1 245 584	221 584	39 184	6 784	1 024	

> 4 $\mu m_{(c)}$ = 45 000 particles
> 6 $\mu m_{(c)}$ = 15 000 particles
> 14 $\mu m_{(c)}$ = 1 500 particles
> 21 $\mu m_{(c)}$ = 250 particles
> 38 $\mu m_{(c)}$ = 15 particles
> 70 $\mu m_{(c)}$ = 3 particle
SAE AS4059 REV G
cpc* Class 6 6/6/5/5/4/2

* cumulative particle count

(1) Size range, optical microscope, based on longest dimension as measured per AS598 or ISO 4407. **(2)** Size range, CMP calibrated per ISO 11171 or an optical or electron microscope with image analysis software, based on projected area equivalent diameter. **(3)** Contamination classes and particle count limits are identical to NAS 1638.

- CLASSES OF CONTAMINATION ACCORDING TO NAS 1638 (January 1964)

The NAS system was originally developed in 1964 to define contamination classes for the contamination contained within aircraft components.
The application of this standard was extended to industrial hydraulic systems simply because nothing else existed at the time.
The coding system defines the maximum numbers permitted of 100 ml volume at various size intervals (differential counts) rather than using cumulative counts as in ISO 4406. Although there is no guidance given in the standard on how to quote the levels, most industrial users quote a single code which is the highest recorded in all sizes and this convention is used on MP Filtri Contamination Monitoring Products (CMP).

The contamination classes are defined by a number (from 00 to 12) which indicates the maximum number of particles per 100 ml, counted on a differential basis, in a given size bracket.

Size Range Classes (in microns)

Maximum Contamination Limits per 100 ml					
Class	5-15	15-25	25-50	50-100	>100
00	125	22	4	1	0
0	250	44	8	2	0
1	500	89	16	3	1
2	1 000	178	32	6	1
3	2 000	356	63	11	2
4	4 000	712	126	22	4
5	8 000	1 425	253	45	8
6	16 000	2 850	506	90	16
7	32 000	5 700	1 012	180	32
8	64 000	11 400	2 025	360	64
9	128 000	22 800	4 050	720	128
10	256 000	45 600	8 100	1 440	256
11	512 000	91 200	16 200	2 880	512
12	1 024 000	182 400	32 400	5 760	1 024

5-15 µm = 42 000 particles
15-25 µm = 2 200 particles
25-50 µm = 150 particles
50-100 µm = 18 particles
> 100 µm = 3 particles
Class NAS 8

- CUMULATIVE DISTRIBUTION OF THE PARTICLES SIZE - ISO 4407

The level of contamination is defined by counting the number of particles collected by a laboratory membrane per unit of fluid volume. The measurement is done by a microscope. The membrane must be cleaned, dried and desiccated, with fluid and conditions defined by the Standard. The fluid volume is filtered through the membrane, using a suitable suction system.
The level of contamination is identified by dividing the membrane into a predefined number of areas and by counting the contaminant particles using a suitable laboratory microscope.

MICROSCOPE CONTROL AND MEASUREMENT

Example figure 1and 2

COMPARISON PHOTOGRAPH'S
1 graduation = 10µm

Fig. 1

Fig. 2

For other comparison photographs for contamination classes see the "*Filtration and Particle Analyser Handbook*".

Scan or click me!

- CLEANLINESS CODE COMPARISON

Although ISO 4406 standard is being used extensively within the hydraulics industry other standards are occasionally required and a comparison may be requested. The table below gives a very general comparison but often no direct comparison is possible due to the different classes and sizes involved.

ISO 4406	SAE AS4059 Table 2	SAE AS4059 Table 1	NAS 1638
> 4 $\mu m_{(c)}$ 6 $\mu m_{(c)}$ 14 $\mu m_{(c)}$	> 4 $\mu m_{(c)}$ 6 $\mu m_{(c)}$ 14 $\mu m_{(c)}$	4-6 6-14 14-21 21-38 38-70 >70	5-15 15-25 25-50 50-100 >100
23 / 21 / 18	13A / 12B / 12C	12	12
22 / 20 / 17	12A / 11B / 11C	11	11
21 / 19 / 16	11A / 10B / 10C	10	10
20 / 18 / 15	10A / 9B / 9B	9	9
19 / 17 / 14	9A / 8B / 8C	8	8
18 / 16 / 13	8A / 7B / 7C	7	7
17 / 15 / 12	7A / 6B / 6C	6	6
16 / 14 / 11	6A / 5B / 5C	5	5
15 / 13 / 10	5A / 4B / 4C	4	4
14 / 12 / 09	4A / 3B / 3C	3	3

6 FILTRATION TECHNOLOGIES

Various mechanisms such as mechanical stoppage, magnetism, gravimetric deposit, or centrifugal separation can be used to reduce the level of contamination.
The mechanical stoppage method is most effective and can take place in two ways:

- SURFACE FILTRATION
  It is by direct interception. The filter prevents particles larger than the pores from continuing in the plant / system. Surface filters are generally manufactured with metal canvases or meshes.

- DEPTH FILTERING
  Filters are constructed by fiber interlacing. Such wraps form pathways of different shapes and sizes in which the particles remain trapped when they find smaller apertures than their diameter.
  Depth filters are generally produced with papers impregnated with phenolic resins, metal fibers or inorganic fibers.
  In inorganic fiber filtration, commonly called microfibre, the filtering layers are often overlapped in order to increase the ability to retain the contaminant.

WIRE MESH FILTRATION

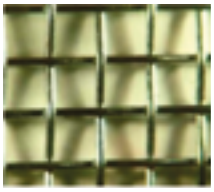

PAPER FILTRATION

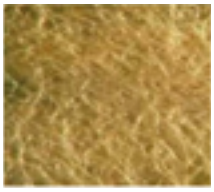

MICROFIBER FILTRATION

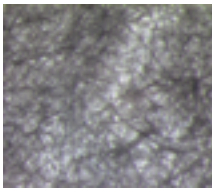

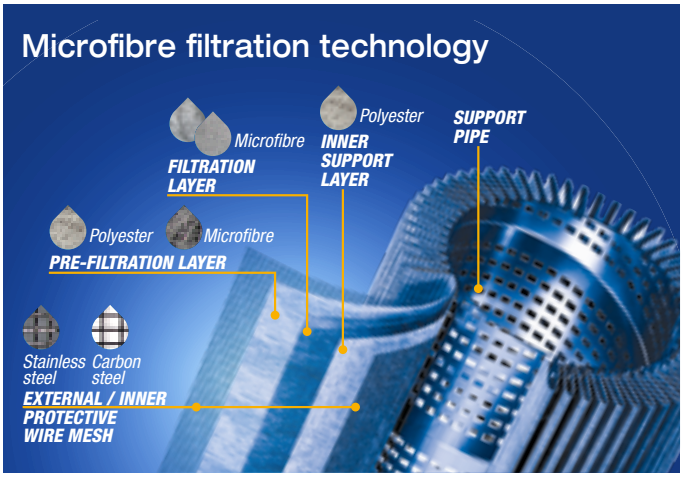

The filtration efficiency of metallic mesh filtrations is defined as the maximum particle size that can pass through the meshes of the filtering grid.
The efficiency of microfibre and paper filtration ($\beta_{x(c)}$) is defined through a lab test called Multipass Test. The efficiency value ($\beta_{x(c)}$) is defined as the ratio between the number of particles of certain dimensions detected upstream and downstream of the filter.

$$\frac{\text{Upstream particles number} > X\ \mu m_{(c)}}{\text{Downstream particles number} > X\ \mu m_{(c)}} = \beta_{x(c)}$$

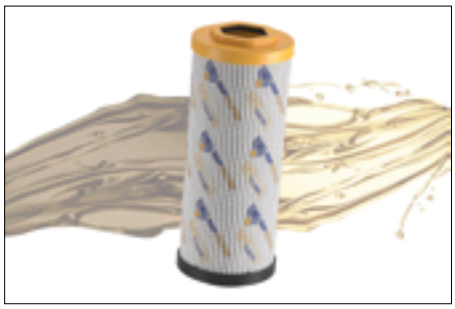

Value ($\beta_{x(c)}$)	2	10	75	100	200	1000
Efficiency	50%	90%	98.7%	99%	99.5%	99.9%

Test conditions, such as type of fluid to be used (MIL-H-5606), type of contaminant to be used (ISO MTD), fluid viscosity, test temperature, are determined by ISO 16889.
In addition to the filtration efficiency value during the Multipass test, other important features, such as filtration stability (β stability) and dirt holding capacity (DHC), are also tested.
Poor filtration stability is the cause of the filtering quality worsening as the filter life rises. Low dirt holding capacity causes a reduction in the life of the filter.

Filtration ISO Standard Comparison		
$\beta_{x(c)}$ > 1000 ISO 16889	β_x > 200 ISO 4572	MP Filtri Filter media code
5 $\mu m_{(c)}$	3 µm	A (00) 03
7 $\mu m_{(c)}$	6 µm	A (00) 06
10 $\mu m_{(c)}$	10 µm	A (00) 10
16 $\mu m_{(c)}$	18 µm	A (00) 16
21 $\mu m_{(c)}$	25 µm	A (00) 25

7 APPLICABLE STANDARDS FOR FILTER DEVELOPMENT

In order to obtain unique criteria for development and verification of the filters performance, specific regulations for the filters and filter elements testing have been issued by ISO. These norms describe the target, the methodology, the conditions and the presentation methods for the test results.

ISO 2941

Hydraulic fluid power -- Filter elements -- Verification of collapse/burst pressure rating

This Standard describes the method for testing the collapse / burst resistance of the filter elements.
The test is performed by crossing the contaminated fluid filter element at a predefined flow rate. The progressive clogging of the filter element, determined by contamination, causes an increase in differential pressure.

ISO 2942

Hydraulic fluid power -- Filter elements -- Verification of fabrication integrity and determination of the first bubble point

This Standard describes the method to verify the integrity of the assembled filter elements.
It can be used to verify the quality of the production process or the quality of the materials by verifying the pressure value of the first bubble point.

ISO 2943

Hydraulic fluid power -- Filter elements -- Verification of material compatibility with fluids

This Standard describes the method to verify the compatibility of materials with certain hydraulic fluids.
The test is carried out by keeping the element (the material sample) immersed in the fluid under high or low temperature conditions for a given period of time and verifying the retention of the characteristics.

ISO 3723

Hydraulic fluid power -- Filter elements -- Method for end load test

This Standard describes the method for verifying the axial load resistance of the filter elements.
After performing the procedure described in ISO 2943, the designed axial load is applied to the filter element. To verify the test results, then the test described in ISO 2941 is performed.

ISO 3968

Hydraulic fluid power -- Filters -- Evaluation of differential pressure versus flow characteristics

This Standard describes the method for checking the pressure drop across the filter.
The test is carried out by crossing the filter from a given fluid and by detecting upstream and downstream pressures.
Some of the parameters defined by the Standard are the fluid, the test temperature, the size of the tubes, the position of the pressure detection points.

ISO 16889

Hydraulic fluid power -- Filters -- Multi-pass method for evaluating filtration performance of a filter element

This Standard describes the method to check the filtration characteristics of the filter elements.
The test is performed by constant introduction of contaminant (ISO MTD). The characteristics observed during the test are the filtration efficiency and the dirty holding capacity related to the differential pressure.

ISO 23181

Hydraulic fluid power -- Filter elements -- Determination of resistance to flow fatigue using high viscosity fluid

This Standard describes the method for testing the fatigue resistance of the filter elements. The test is carried out by subjecting the filter to continuous flow variations, thus differential pressure, using a high viscosity fluid.

ISO 11170

Hydraulic fluid power -- Sequence of tests for verifying performance characteristics of filter elements

The Standard describes the method for testing the performance of filter elements. The protocol described by the regulations provides the sequence of all the tests described above in order to verify all the working characteristics (mechanical, hydraulic and filtration).

ISO 10771-1

Hydraulic fluid power -- Fatigue pressure testing of metal pressure-containing envelopes -- Test method

This Standard describes the method to check the resistance of the hydraulic components with pulsing pressure.
It can be applied to all metal components (excluding tubes) subject to cyclic pressure used in the hydraulic field.

Description

Mobile filtration units

UFM 051 mobile filtration units suitable for filling and refilling of filtered hydraulic fluids and lubrication tanks.

The filter unit connected to off-line to the tank (recommended maximum volume of 500/750 L.), can be used as a support to the filtration plant on start-up for fast flushing action, either as additional filtration systems with a high incidence of contamination.

Continued use is recommended for the version with three phase electric motor.

Features & Benefits

- Compact size
- Continue Operation Pressure 10 bar
- Easy to use
- Easy maintenance
- Reliable
- Absolute filtration
- In-line Contamination Monitor

Available in three configurations:

- configuration with start / stop differential pressure indicator - visual

- configuration with start / stop automatic motor
- cut-out from differential pressure indicator - electrical / visual

- configuration with start / stop phase inverter automatic motor
- cut-out from differential pressure indicator - electrical / visual
- in-line Particle Counter ICM

Technical data

Pump
Gear pump

Electric Motor
1.5 kW 230 V single phase electric motor
1.5 kW 400 V three phase electric motor with ICM 2.0

Flow (l/min)
50 l/min - 1450 r.p.m.

Operation Pressure
Maximum: 10 bar

Viscosity range
Min. operation 10 cSt
Max. operation 300 cSt
Max. only for cold start 800 cSt

Suction Filter
Type Y filtration 800 µm

Filtration Rating
See designation order for cartridge and filter elements

Bypass valve Δp set
Rating 3.5 bar
The bypass can be blocked through the spigot

Fluid Temperature
From -10 °C to +80 °C

Ambient Temperature
From -20 °C to +45 °C

Weight
70 kg (154.3 lb)

Dimensions
See drawings

Protection Class
IP55

Fluid Compatibility
Mineral Oil & Synthetic Oil - Other on request

Suction hose	lance
DN32 length 3000 mm	DN/OD42 length 700 mm

Pressure hose	lance
DN25 length 3000 mm	DN/OD30 length 700 mm

Equipment
- Differential Clogging indicator - Visual (setting 3.0 bar ±10%)
- Differential Clogging indicator - Electrical / Visual (setting 3.0 bar ±10%)
- Differential Clogging indicator - Electrical / Visual - with ICM 2.0 (setting 3.0 bar ±10%)

CE **Standard**

UFM 051

Designation & Ordering code

MOBILE FILTRATION UNIT UFM 051

Configuration example: UFM | 051 | T | A | 2 | 0 | 1 | 0 | P01

Series

UFM

Size

051 50 l/min

Electric motor

M 230 V Single phase

T 400 V Three phase

Seals

A NBR

Pressure gauges and clogging indicators (see below)		particle counter option 0	particle counter option 1
2	Manometer (*) + Visual diff. clogging indicator	•	-
3	Manometer (*) + Electrical diff. clogging indicator (visual indication on panel)	•	•

Filter element

0 Without element (for ordering, see below)

Filtration surface

1 Standard

2 Higher

Particle counter option		Electric motor M	Electric motor T
0	Without ICM	•	•
1	With ICM 2.0	•	•

Option

P01 MP Filtri standard

Pxx Customized

Filtration element should be ordered separately

FILTER ELEMENT

FILTRATION SURFACE 1 - STANDARD

Inorganic microfibre	
CU 400 5 A01 A N P01	01 µm
CU 400 5 A03 A N P01	03 µm
CU 400 5 A06 A N P01	06 µm
CU 400 5 A10 A N P01	10 µm
CU 400 5 A16 A N P01	16 µm
CU 400 5 A25 A N P01	25 µm

Wire mesh element	
CU 400 5 M25 A N P01	25 µm
CU 400 5 M60 A N P01	60 µm

Multi-Layer water absorber	
CU 400 5 WA025 A N P01	25 µm

FILTRATION SURFACE 2 - HIGHER

Inorganic microfibre	
CU 400 6 A01 A N P01	01 µm
CU 400 6 A03 A N P01	03 µm
CU 400 6 A06 A N P01	06 µm
CU 400 6 A10 A N P01	10 µm
CU 400 6 A16 A N P01	16 µm
CU 400 6 A25 A N P01	25 µm

Wire mesh element	
CU 400 6 M25 A N P01	25 µm
CU 400 6 M60 A N P01	60 µm

Multi-Layer water absorber	
CU 400 6 WA025 A N P01	25 µm

CLOGGING INDICATORS

DVM Visual Differential Indicator

Settings	Ordering code
3.0 bar ±10%	DV M 30 x P01

DEA Electrical Differential Indicator (visual indication on panel)

Settings	Ordering code
3.0 bar ±10%	DE A 30 x A 50 P01

Dimensions

Filter length	H1 [mm]
1	1230 standard
2	1530 higher

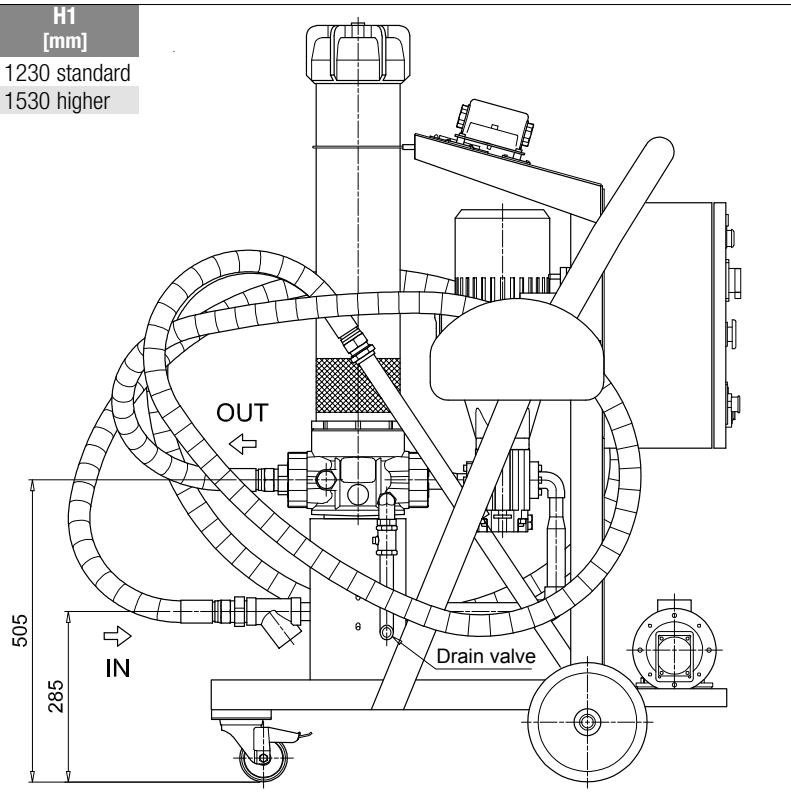

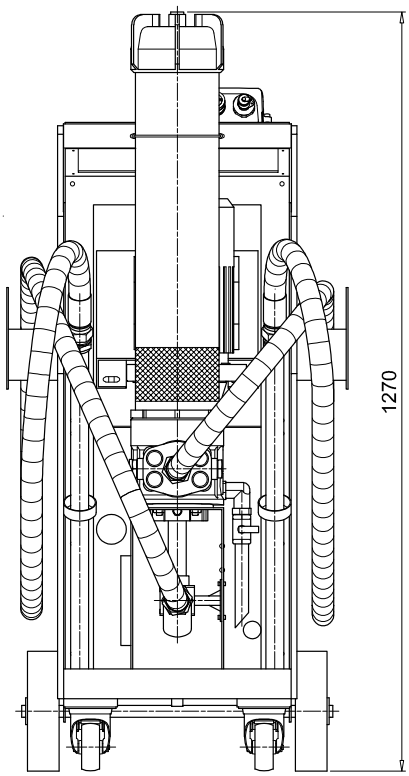

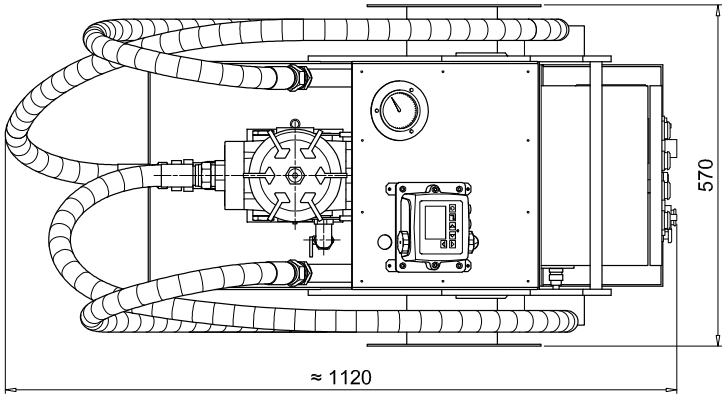

HYDRAULIC CIRCUIT

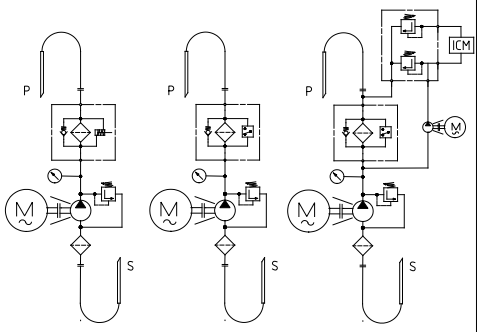

with visual differential indicator | with visual / electrical differential indicator | with ICM 2.0 particle counter

For the complete spare part list please refer to manual

Scan or click me!