EBA Tipper Pump

Technical Specification

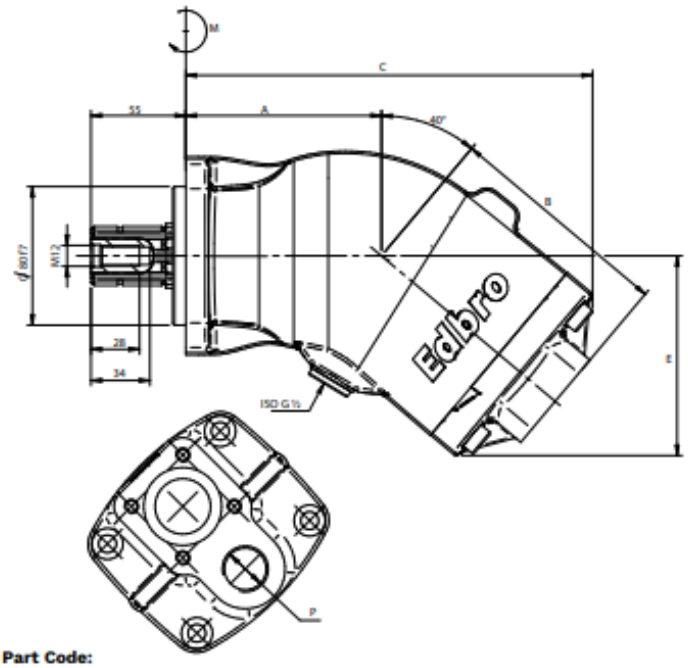

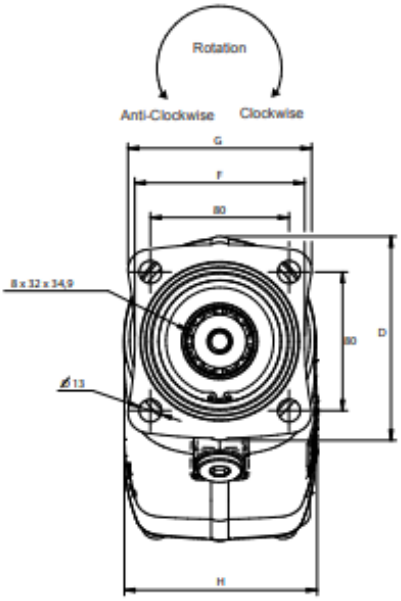

Spline shaft:
DIN 5462/ISO 14

Mount flange:
ISO 7653-D

Part Code:
EBA /xxx/30/#

xxx - Choose from below (Pump Flow)

			047	064	090	130
Theoretical oil flow l / min at pump speed	rpm	500	23.5	31.8	45.0	65.0
		1000	47.1	63.6	90.0	130.0
		1500	70.6	95.4	135.0	195.0
Displacement	cm^3/rev		47.1	63.6	90.0	195.0
Max pump speed						
continuous	rpm		1900	1900	1500	1500
limited			2500	2500	2000	2000
Max working pressure	bar		300	300	300	300
Weight	kg		9.8	9.8	9.8	13.9
Dimensions	mm	A	113	113	113	122
		B	131	131	131	147
		C	235	235	235	264
		D	118	118	118	127
		E	115	115	115	133
		F	98	98	98	98
		G	106	106	106	106
		H	111	111	111	118
	ISO G	P	3/4	3/4	3/4	1
Self-weight moment (M)	Nm	6.0	11.5	11.5	11.5	18.0

xxx- Pump Flow cc/rev
30- 300 bar
#- Direction of Rotation- Part codes ending in (C) will refer to Clockwise rotation, (A) will refer to Anti-clockwise rotation.

For installation and oil recommendations please refer to the General Instructions document. www.technical.edbro.com