Splitview / Spare Parts

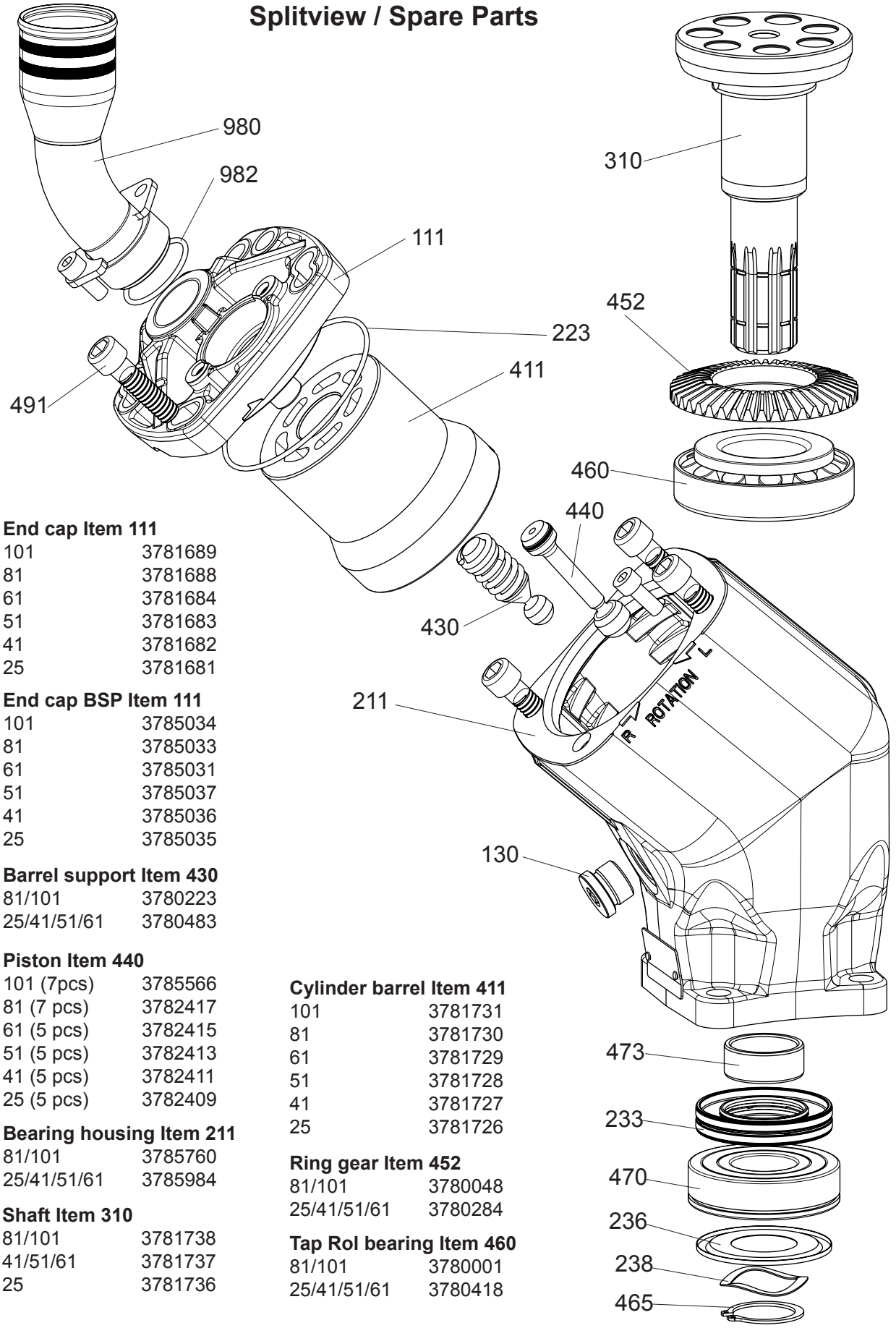

End cap Item 111

101	3781689
81	3781688
61	3781684
51	3781683
41	3781682
25	3781681

End cap BSP Item 111

101	3785034
81	3785033
61	3785031
51	3785037
41	3785036
25	3785035

Barrel support Item 430

81/101	3780223
25/41/51/61	3780483

Piston Item 440

101 (7pcs)	3785566
81 (7 pcs)	3782417
61 (5 pcs)	3782415
51 (5 pcs)	3782413
41 (5 pcs)	3782411
25 (5 pcs)	3782409

Bearing housing Item 211

81/101	3785760
25/41/51/61	3785984

Shaft Item 310

81/101	3781738
41/51/61	3781737
25	3781736

Cylinder barrel Item 411

101	3781731
81	3781730
61	3781729
51	3781728
41	3781727
25	3781726

Ring gear Item 452

81/101	3780048
25/41/51/61	3780284

Tap Rol bearing Item 460

81/101	3780001
25/41/51/61	3780418