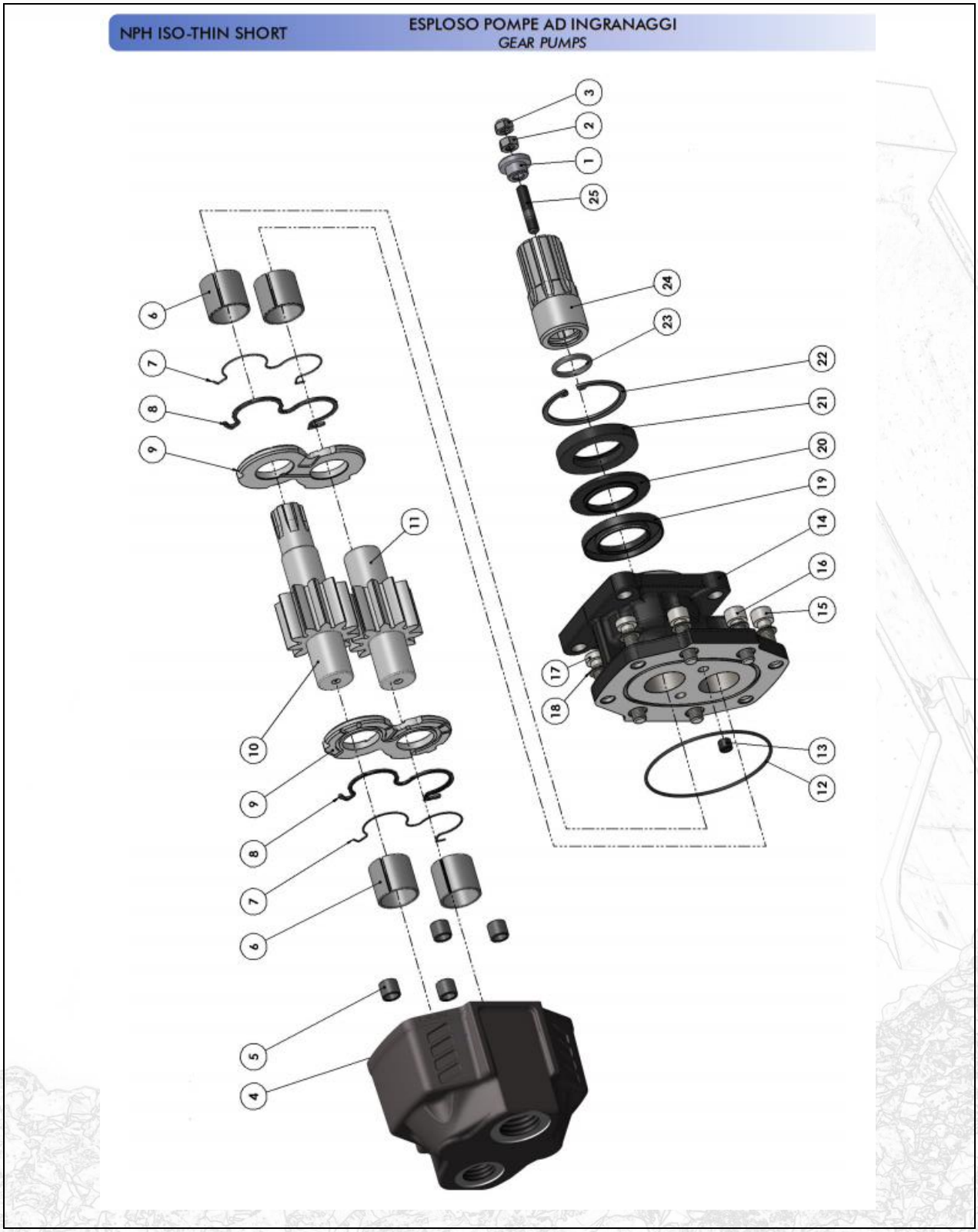EV NPH ISO THIN SHORT